9 27010223 Outdoor 2.4 GHz Single-Polarized Directional Antenna (H90 V7 G17)

About This Chapter

9.1 27010223 Technical Specifications
9.2 27010223 Installation Precautions
9.3 27010223 Antenna Installation

9.1 27010223 Technical Specifications

Appearance and Structure

Figure 9-1 Appearance of the 27010223 Outdoor 2.4 GHz Single-Polarized Directional Antenna (H90 V7 G17)

 Copyright © Huawei Technologies Co., Ltd.

Technical Specifications

Table 9-1 Technical specifications of the 27010223 Outdoor 2.4 GHz Single-Polarized Directional Antenna (H90 V7 G17)

Item	Details
Part Number	27010223
Model	TDJ-SA2400-17-90
Description	Directional Antenna,2400~2500MHz, 17dBi,90deg/7deg,N/Female,1port,with mounting parts,pole mounting
Frequency [MHz]	2400 MHz to 2500 MHz
Antenna gain [dBi]	17 dBi
Coverage distance [m(ft.)]	230 m(ft.)
Horizontal beamwidth [degrees]	90 degrees
Vertical beamwidth [degrees]	7 degrees
Standing wave ratio (SWR)	≤ 1.5
Polarization	Vertical polarization
Attenna connector	N-female
Attenna dimensions [mm(in.)]	H x W x D: 58 x 970 x 140
Weight without packaging [kg(lb)]	5 kg(lb)
Installation type	Pole
Grounding requirements	Same as the AP
Pole diameter [mm(in.)]	ϕ50 to ϕ115

 Copyright © Huawei Technologies Co., Ltd.

Item	Details
Attenna note	The gains and lobe widths in this document are typical values. The actual values are within a range. For specifications, see the corresponding data sheets. The coverage distance is a reference value in certain conditions. Plan an appropriate distance value according to planning experience, local standards, and onsite environments. There may be differences in the standards of different countries, so the mapping between antennas and APs shall comply with local standards. For details, refer to device access authentication information. The coverage distance is subject to the following constraints: - The default AP transmit power is 15 dBm. - The default STA type is mobile phone, and no obstacle exists. - 2.4 GHz: The uplink and downlink RSSIs are greater than or equal to -70 dBm. For any questions about the parameters above, contact Huawei technical support.

 Copyright © Huawei Technologies Co., Ltd.

Antenna's Radiation Pattern

Figure 9-2 Antenna Pattern1 of the 27010223 Outdoor 2.4 GHz Single-Polarized Directional Antenna (H90 V7 G17)

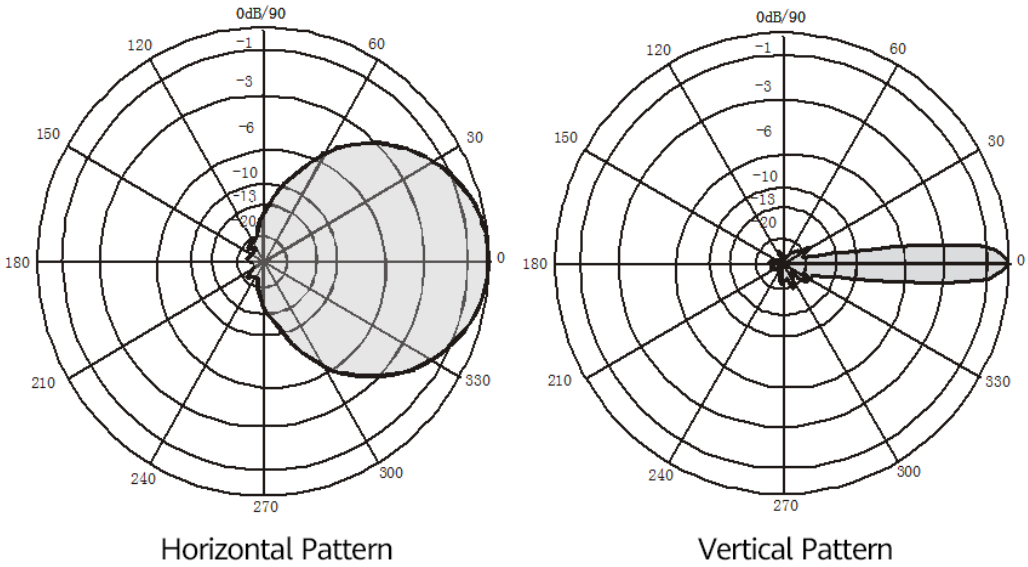

9.2 27010223 Installation Precautions

To ensure that the antenna works at the optimal performance level, take the following installation precautions:

- Install the antenna upright and place one side of the RF cable connector towards the ground.
- When installing single-polarized antennas, keep the distance between two antennas to within 30 cm to 50 cm.
- Install the antenna away from metal obstructions, such as air conditioners or heating pipes. Do not install the antenna on a wire mesh.
- Wall materials and thickness determine the number of walls that radio signals can pass through. Factor that into antenna selection.
- Install lightning rods for outdoor antennas to prevent lightning strikes. For details on how to install a lightning rod, see section "Antenna Installation."
- Ensure that no obstacle exists in the Fresnel zone in bridging scenarios. That is, the antenna height must be larger than the sum of the radius of the first Fresnel zone and obstacle height.

  As shown in the figure, the Fresnel zone refers to the ellipsoid. Obstacles in the zone will adversely affect signal transmissions. If not blocked, radio signals can travel in an approximate free space.

 Copyright © Huawei Technologies Co., Ltd.

Figure 9-3 Fresnel zone

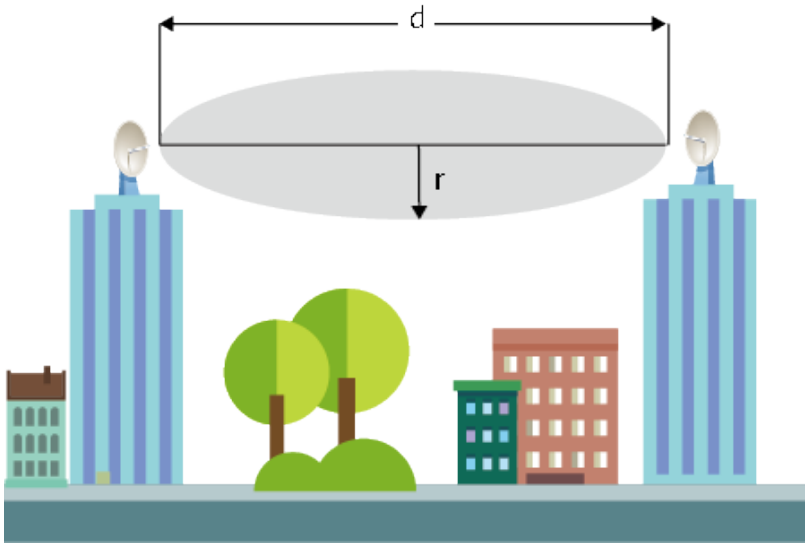

Fresnel zones differ depending on the Fresnel zone radius. In a free space, radio signals are mainly transmitted between antennas in the first Fresnel zone. In normal cases, the Fresnel zone refers to the first Fresnel zone.

The radius of the first Fresnel zone is calculated and related parameters are described as follows:

$$r = 17.32\sqrt{d/4f}$$

- r: indicates the radius of the first Fresnel zone, in meters.
- d: indicates the distance between two antennas, in km.
- f: indicates the signal frequency, in GHz.

With 5 GHz signals as an example, **Table 9-2** lists the radius of the first Fresnel zone in different backhaul distances.

Table 9-2 Radius of the first Fresnel zone

Backhaul Distance (km)	Radius of the First Fresnel Zone (m)
1	3.87
2	5.48
3	6.71
5	8.66
10	12.25

9.3 27010223 Antenna Installation

The 27010223 antenna is an outdoor 2.4 GHz directional antenna. To obtain a better performance and wider coverage, the antenna should be installed at high

 Copyright © Huawei Technologies Co., Ltd.

positions away from metal obstacles, for example, building tops, mountaintops, and tower tops. Its transmit end should not be blocked by obstacles.

9.3.1 Accessories and Tools

Tools:

- 2 x 13 mm open-end wrench

Pole

- 1 x pole with a diameter of ϕ50 mm to ϕ115 mm

Other accessories:

- Connection arm: 1 PCS
- Toothed clamp: 2 PCS
- M8x120 bolt, flat washer, and nut: 4 sets
- M6x16 bolt, flat washer, spring washer and nut: 8 sets

9.3.2 Pole Mounting

The 27010223 antenna is mounted on a pole. The wall thickness of the pole should be no less than 2.5 mm. A 50 mm diameter pole made of round steel is usually used.

CAUTION

- The antenna must be installed in a place far away from high-voltage power supplies or radio signal interference sources (such as other APs or antennas).
- Do not install antennas in bad weather conditions, for example, during rain, snow, or strong winds.

Fixing the Antenna to the Pole

Installation of the antenna

 Copyright © Huawei Technologies Co., Ltd.

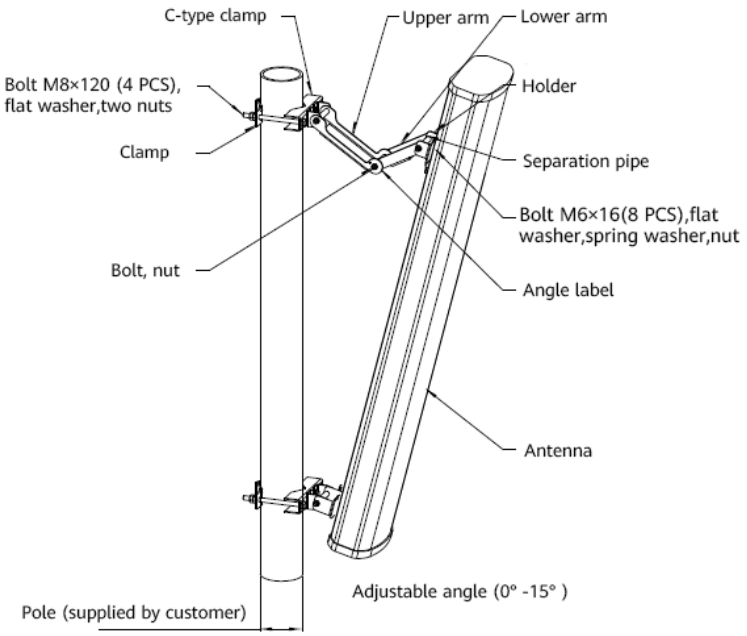

Carry out the following steps:

1. Loosen the nut between the upper and lower arms.
2. Secure the toothed clamps at the top mounting assembly to the pole.
   a. Remove the bolts, nuts, spring washers, and flat washers from the toothed clamps.
   b. Place the toothed clamp connected to the antenna against the pole, thread the bolts through the toothed clamp, put the other toothed clamp on the bolts, and put back the flat washers, spring washers and nuts.
   c. Tighten the nuts to secure the toothed clamps (not tightly).
3. Repeat step 2 to secure the toothed clamps at the bottom mounting assembly to the pole.
4. Adjust the antenna until it is perfectly vertical (the adjustable angle is 0 degrees), adjust the toothed clamps, and then secure all the toothed clamps to the pole. Set the desired antenna tilt angle and then tighten all nuts on the top and bottom assemblies with a tightening torque of 18 N m.
5. Remove the protective cap from the antenna connector, connect the feeder cable to the connector, and tighten the connector. Thoroughly wrap the cable connector with waterproof tape. For details, see the section "Connecting RF Cables."

Installing the Pole and Lightning Rod

Carry out the following steps:

1. Weld the lightning rod to the top of the antenna pole.
2. Install the antenna pole on a parapet or concrete bed on the roof of the building.

 Copyright © Huawei Technologies Co., Ltd.

3. Use a 40 mm x 4 mm flat piece of steel to connect the antenna pole to an earth mat.
4. Secure the outdoor directional antenna to the pole using an antenna support. Keep the pole vertical during the installation.

Take note of the following points when installing an outdoor directional antenna:

- If the roof of the building is surrounded by parapets of no less than 1.2 m high, fix the pole on a parapet with expansion screws, and then fix the outdoor directional antenna on the pole with an antenna support.
- If the roof of the building is surrounded by parapets of less than 1.2 m high, fix one of the installation points of the pole on a parapet and the other installation point to the roof with expansion screws, and then fix the outdoor directional antenna to the pole with an antenna support.
- If there are no parapets around the roof, fix the pole to the ground or a concrete bed with expansion screws and steel wires, and then fix the outdoor directional antenna on the pole with an antenna support.

Figure 9-4 illustrates how an outdoor directional antenna and a pole are installed.

Figure 9-4 Installing an outdoor directional antenna and a pole

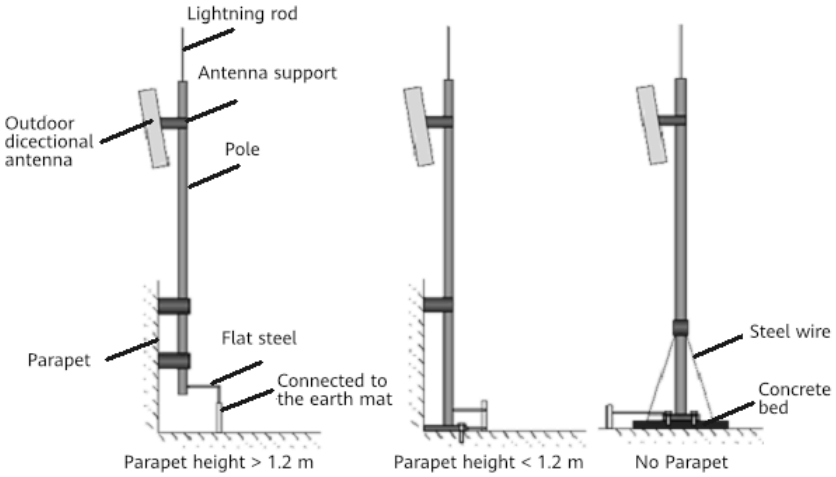

The following figure shows the protection area of a lightning rod. The entire antenna must be within the 45-degree protection area of the lightning rod.

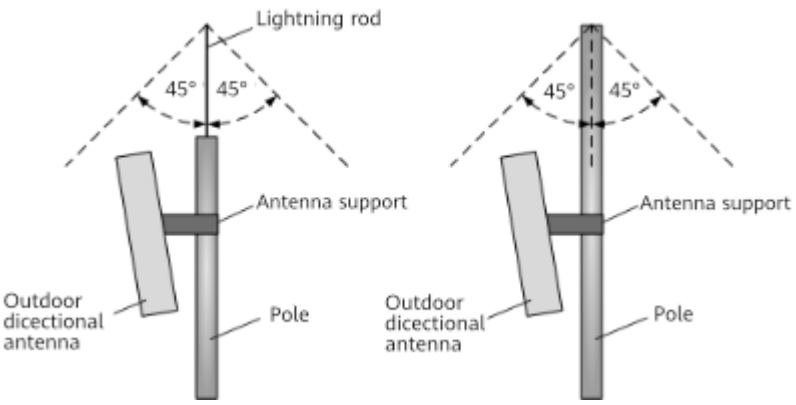

 Copyright © Huawei Technologies Co., Ltd.

NOTE

If an antenna is installed on a metal pole such as a steel pole, you do not need to install a lightning rod, as shown on the right in the preceding figure.

Outdoor AP Installation Scenarios

Figure 9-5 shows an outdoor AP installation scenario. The distance between a 2.4 GHz antenna and a 5 GHz antenna must be more than 0.5 m.

Figure 9-5 Outdoor AP installation scenarios

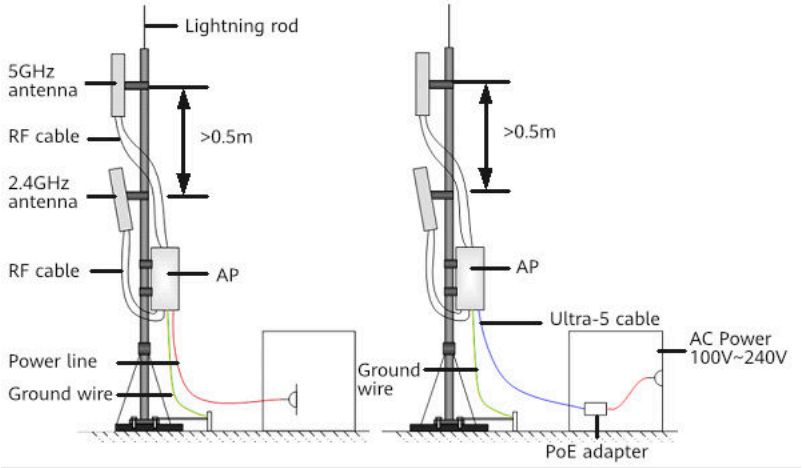

The distance between two single-polarized antennas of the same AP should be more than 0.5 m, and the two antennas should cover the same area, as shown in **Figure 9-6**.

Figure 9-6 Installation of single-polarized antennas

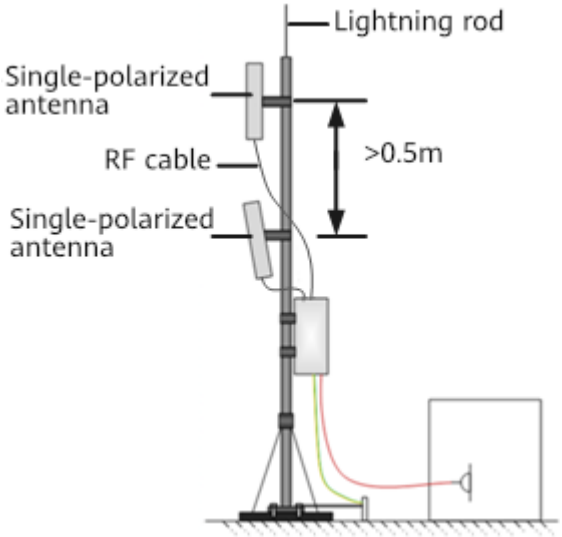

 Copyright © Huawei Technologies Co., Ltd.

9.3.3 Connecting RF Cables

RF Cable Connection Requirements

Connect the feeder connector to the radio interface of an AP and tighten the connector to the interface.

RF Cable Deployment Requirements

- Use a short feeder cable to connect the antenna to an AP.
- It is recommended that you connect a 50 ohm RF load to an idle antenna interface and wrap the RF load with both the insulation and waterproof tape.
- Wrap the RF cable in single-layer PVC insulation tape, triple-layer waterproof tape, and then triple-layer PVC insulation tape.
- Before wrapping the waterproof tape, stretch the tape evenly until it is 1/2 the width as before. With each layer of tape wrap the cable tightly and ensure that each layer covers more than 50% of the layer beneath it.
- Wrap the triple-layer tape from bottom to top, from top to bottom, and then from bottom to top again.
- Bend radius requirements: RG-8U RF cable: > 150 mm; 1/2" RF cable: > 50 mm; 7/8" RF cable: > 250 mm. One inch (1") equals 25.4 mm.
- The grounding requirements of antennas are the same as those of APs.

RF Cable Connections

1. Antenna interfaces of Huawei outdoor APs provide a 5 kA surge protection capability. In general, no additional surge protective device needs to be installed, and the RF cables are directly connected to the antenna interfaces.

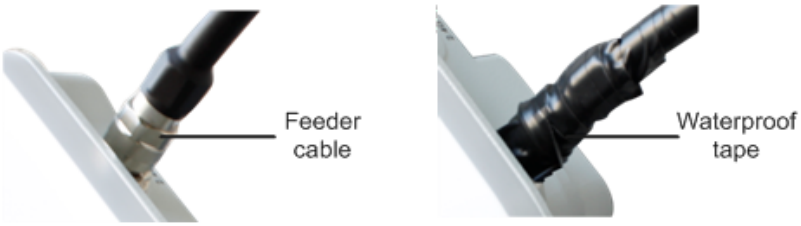

NOTE

Outdoor APs support built-in surge protection on all interfaces, but the surge protection works only when the outdoor APs are grounded.

2. If a higher surge protection capability is required, you need to purchase a surge protective device separately. When installing the surge protective device, ensure that it is connected to a ground cable.

 Copyright © Huawei Technologies Co., Ltd.

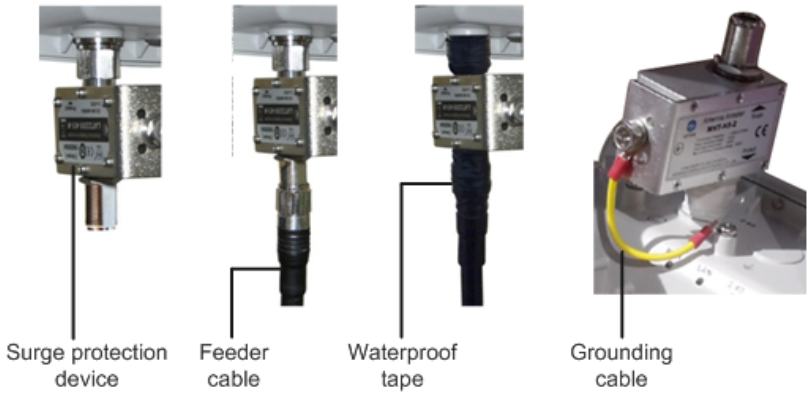

Instructions on Making RF Cables

When making RF cables onsite, ensure that the coaxial cables and connectors in use comply with the mappings described in Table **Coaxial cables and connectors**.

Table 9-3 Coaxial cables and connectors

Coaxial Cable	Coaxial Connector	Cable Loss	Appearance
RG-8U(25070009)	Type-N male connector (14040184)	• 2400MHz ~2483.5 MHz: 26.8dB/100m • 4920Mhz ~5825Mhz: 41.8dB/100m	
1/2" (inch) super-flexible cable (25070076)	Type-N male connector (14040150)	• 2400MHz ~2483.5 MHz: 18.1dB/100m • 4920Mhz ~5825Mhz: 30dB/100m	

Connecting the type-N male coaxial connector to the RG-8U feeder cable

1. Peel the cable.
2. Install accessories, such as the nut.

 Copyright © Huawei Technologies Co., Ltd.

3. Install the connector body.
4. Tighten the connector on the cable.
5. After assembly is complete, verify that cable attenuation is within the proper range. Take waterproof measures during the operation.

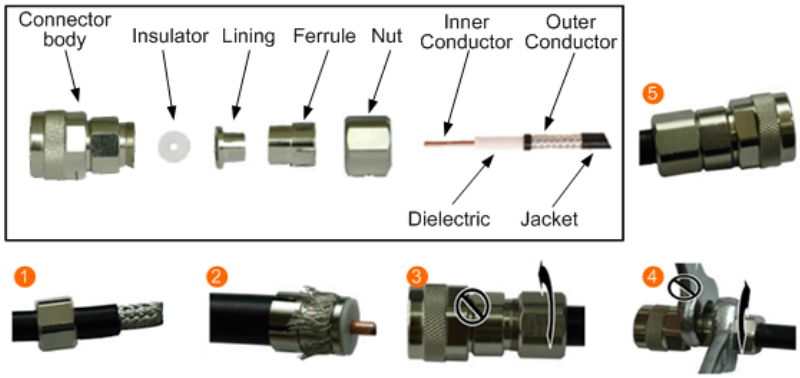

Connecting the type-N male coaxial connector to the 1/2" feeder cable

1. Peel the cable.
2. Install the back nut.
3. Install the front nut.
4. Put the cable through the heat-shrink tubing.
5. After assembly is complete, verify that cable attenuation is within the proper range. Take waterproof measures during the operation.

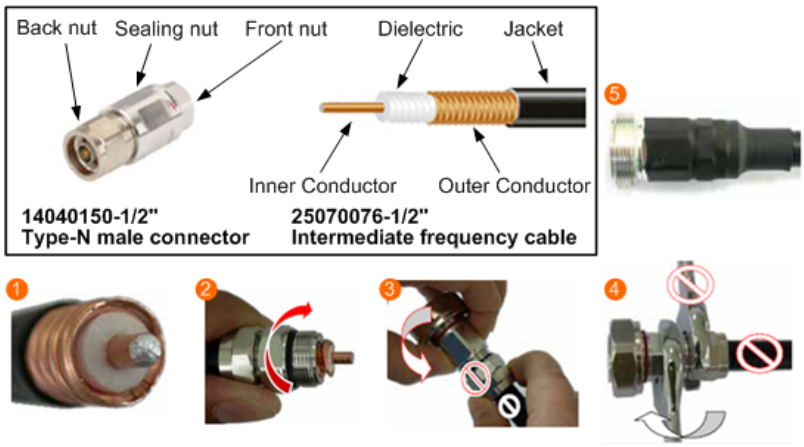

 Copyright © Huawei Technologies Co., Ltd.